Service Bulletin

JAGUAR Daimler

ERRATA

WITH REFERENCE TO SERVICE BULLETIN JD 17/92, PLEASE NOTE THAT THE WARRANTY COMPLAINT CODE SHOWN ON PAGE 2 AS 1LBK IS INCORRECT. THIS CODE SHOULD READ 1LKB

V12 AND AJ6 ENGINES **ITEM: 01**

12 INTRODUCTION OF GRADED CRANKSHAFT BEARINGS

As part of Jaguar's on–going commitment to improving quality, three grades (sizes) of crank pin and journal bearings have been introduced on all production V12 and AJ6 engines. This will improve engine and vehicle refinement by reducing the maximum crank running clearances by approximately 20%.

Graded bearings were introduced on production from the following engine numbers:

V12 XJS: 8S 86817

V12 Series III: 7P 76912

6.0 JaguarSport: TBA *

3.2: 9B 111574

4.0: 9E/9W 164637

* 6.0 litre JaguarSport engines will use the grading system when a common crank shaft is used for both JaguarSport and Jaguar 6.0 litre engines.

The three different grade diameters of the journals and pins are represented by a letter which corresponds to a colour, i.e. "P" equals Pink, "R" equals Red, etc. The grade of each individual journal and pin on each crankshaft is identified by having the grading diameter colour stamped on the No 1 balance weight, indicating the grade of shell to be fitted, as follows:

Jaguar Cars Limited 2005

V12

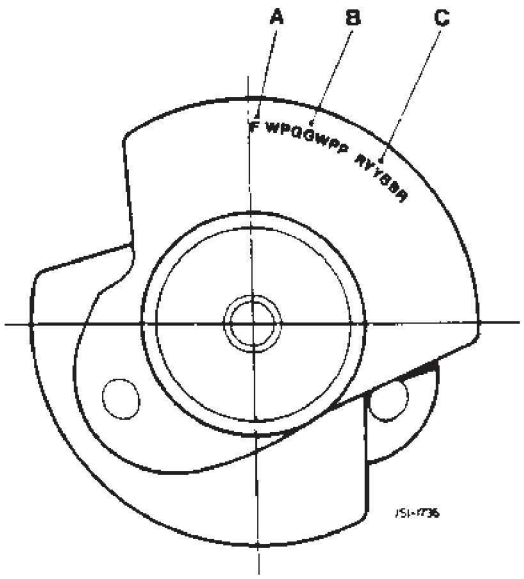

AJ6

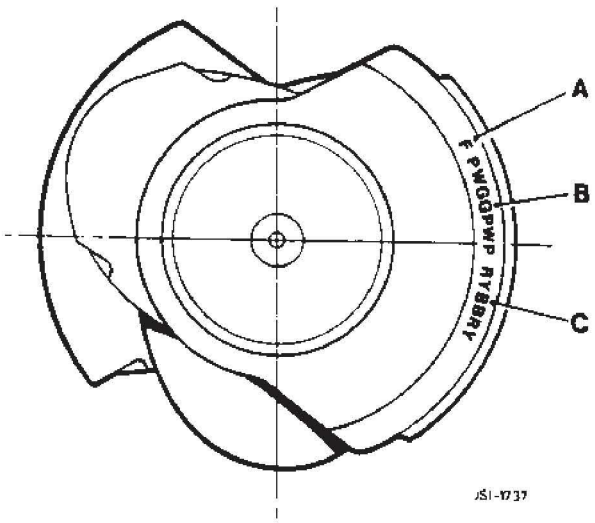

A: F Indicates front
B: Journals 1 to 7
C: Pins 1 to 6

A: F Indicates front
B: Journals 1 to 7
C: Pins 1 to 6

The bearing shell is identified by having the colour on one of its edges.

The grade letter and colour for each diameter are as follows:

V12

JOURNALS		
GRADE LETTER	GRADE COLOUR	GRADE DIAMETER
P	PINK	3.0005 INS (76.212MM) 3.0008 INS (76.220MM)
W	WHITE	3.0009 INS (76.222MM) 3.0012 INS (76.230MM)
G	GREEN	3.0013 INS (76.233MM) 3.0016 INS (76.240MM)

PINS		
GRADE LETTER	GRADE COLOUR	GRADE DIAMETER
R	RED	2.2993 INS (58.402MM) 2.2996 INS (58.409MM)
Y	YELLOW	2.2997 INS (58.412MM) 2.3000 INS (58.420MM)
B	BLUE	2.3001 INS (58.422MM) 2.3004 INS (58.430MM)

Jaguar Cars Limited 2005

AJ6

JOURNALS		
GRADE LETTER	GRADE COLOUR	GRADE DIAMETER
P	PINK	3.0002 INS (76.207MM) 3.0006 INS (76.216MM)
W	WHITE	3.0006 INS (76.217MM) 3.0010 INS (76.226MM)
G	GREEN	3.0010 INS (76.227MM) 3.0014 INS (76.236MM)

PINS		
GRADE LETTER	GRADE COLOUR	GRADE DIAMETER
R	RED	2.0852 INS (52.966MM) 2.0856 INS (52.975MM)
Y	YELLOW	2.0856 INS (52.976MM) 2.0860 INS (52.985MM)
B	BLUE	2.0860 INS (52.986MM) 2.0864 INS (52.995MM)

New Part Numbers for the graded bearing shells are as follows:

V12 GRADED BEARING SHELLS (5.3 & 6.0 LITRE)

PART NUMBERS

		PART NO	NO PER ENGINE	COLOUR CODE	REPLACES
CONN ROD BEARING	SIZE 1 SIZE 2 SIZE 3	JLM 11138/01 JLM 11138/02 JLM 11138/03	12	RED YELLOW BLUE	C 38933
MAIN BEARING – FRONT/INTERMEDIATE	SIZE 1 SIZE 2 SIZE 3	JLM 11139/01 JLM 11139/02 JLM 11139/03	5	PINK WHITE GREEN	C 29313/1
MAIN BEARING – CENTRE	SIZE 1 SIZE 2 SIZE 3	JLM 11140/01 JLM 11140/02 JLM 11140/03	1	PINK WHITE GREEN	C 29314/1
MAIN BEARING – REAR	SIZE 1 SIZE 2 SIZE 3	JLM 11141/01 JLM 11141/02 JLM 11141/03	1	PINK WHITE GREEN	EAC 3973
CRANKSHAFT 5.3L		EBC 10961			
CRANKSHAFT 6.0L		EBC 10992			

Jaguar Cars Limited 2005

AJ6 GRADED BEARING SHELLS (3.2 & 4.0 LITRE)

PART NUMBERS

		PART NO	NO PER ENGINE	COLOUR CODE	REPLACES
CONN ROD BEARING	SIZE 1 SIZE 2 SIZE 3	JLM 11135/01 JLM 11135/02 JLM 11135/03	6	RED YELLOW BLUE	EAC 2502
MAIN BEARING – FRONT/INTERMEDIATE/REAR	SIZE 1 SIZE 2 SIZE 3	JLM 11136/01 JLM 11136/02 JLM 11136/03	6	PINK WHITE GREEN	EAC 7957 (red) EAC 7958 (blue)
MAIN BEARING – CENTRE	SIZE 1 SIZE 2 SIZE 3	JLM 11137/01 JLM 11137/02 JLM 11137/03	1	PINK WHITE GREEN	EAC 7961 (red) EAC 7962 (blue)
CRANKSHAFT 3.2L		EBC 10916			
CRANKSHAFT 4.0L		EBC 10915			

If a crankshaft or bearing problem is encountered on engines built prior to the introduction of graded bearings, the following applies:

If the bearing shells only have to be replaced, sets of the old condition shells will still be available and should be ordered as before.

If the crankshaft needs to be changed, a graded bearing crankshaft will be supplied from Parts Operations and the relevant graded bearings will need to be fitted.

If a crankshaft or bearing problem is encountered on engines with the graded bearings, the following applies:

If the bearing shells only have to be replaced, the relevant shells, as noted on the No.1 balance weight (see above), should be ordered.

If the crankshaft needs to be replaced, a graded bearing crankshaft will be supplied by Parts Operations and the relevant graded bearings should be ordered separately.

ALL MODELS **ITEM: 02**

17 EVAPORATIVE EMISSION CONTROL SYSTEM

In order to meet stricter world–wide emission regulations, an Evaporative Emission Control System is now fitted to all Jaguar vehicles.

Introduction VIN's are:

XJS – 184907
SERIES III – 486831
XJ6 – 664941

Evaporative Emission Control Systems are designed to prevent fuel vapour, which consists mainly of hydro–carbons, escaping into the atmosphere.

The following is a resumé of major components of the system and the way in which the system functions:

Jaguar Cars Limited 2005

MAJOR COMPONENTS:

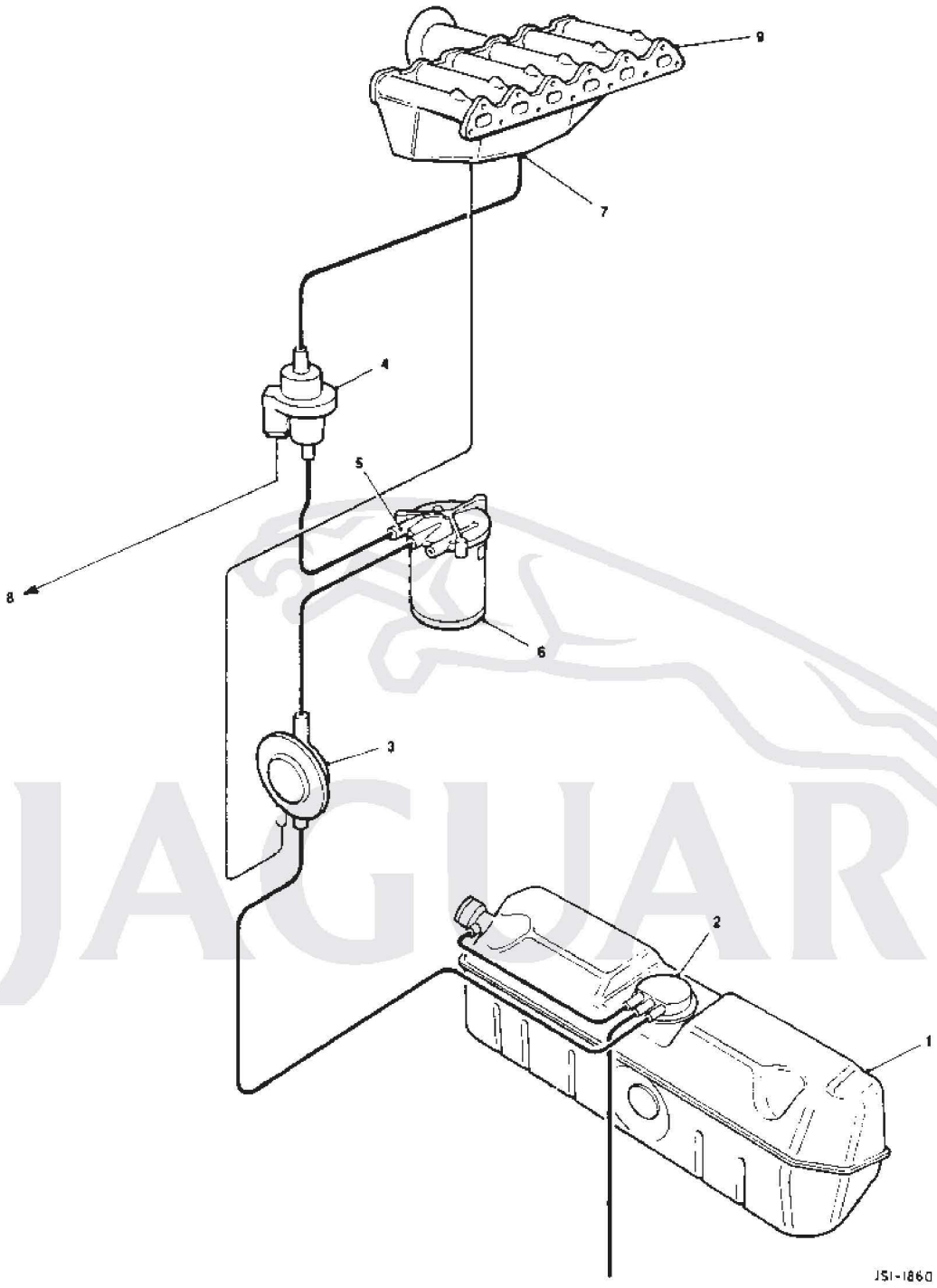

1. Fuel Tank
2. Evaporative loss flange
3. Pressure/Vacuum relief valve with vacuum operated by–pass valve
4. Purge control valve
5. Purge air port (on charcoal canister)
6. Charcoal canister
7. Purge port (on induction manifold)
8. Electrical connection to ECU
9. Induction manifold

Jaguar Cars Limited 2005

THE SYSTEM FUNCTIONS IN THE FOLLOWING WAY:

Fuel vapour, generated in the fuel tank, is passed in a controlled manner to a storage device, located at the front left–hand side of the vehicle, in front of the road wheel. The storage device is a plastic canister filled with charcoal, (6, Fig 1). The charcoal absorbs the vapour, enhancing the storage capacity of the canister.

When a vehicle is at rest with the engine turned off, the flow of vapour is controlled by a pressure/vacuum relief valve (3, Fig 1), so that a low positive pressure is maintained in the fuel tank. If this pressure exceeds approximately 1.5 psi, the pressure/vacuum relief valve opens, to allow the excess pressure and fuel vapour to bleed into the charcoal canister, thus maintaining the low positive pressure.

Should there be any blockage of the line between the fuel tank and the charcoal canister, there are further pressure relief valves, in both the evaporative loss flange and the fuel filler cap, to prevent any excess tank pressure.

When the engine is running, the pressure/vacuum relief valve is held open by engine vacuum, allowing an unchecked flow of vapour from the fuel tank to the canister and "zero" pressure in the fuel tank (i.e. atmospheric pressure.)

The charcoal canister is connected to the vehicle's induction manifold via a purge control valve (Fig 1, item 4), the operation of which is controlled by an electrical signal from the engine management ECU, according to a pre–determined map.

The canister is purged by drawing the vapour into the induction manifold, the volume of vapour being controlled by the purge valve via the ECU. The vapour is then disposed of during the combustion process.

ALL 4.OL AUTO MODELS **ITEM: 03**

18 TRANSMISSION CONTROL UNIT (TCU)

Should an automatic transmission failure warning be accompanied by fault codes 17 and 08 (torque control and select – possible open circuit), technicians may assume that the transmission control unit (TCU) is faulty and erroneously logging the fault codes, particularly if no fault is immediately evident with the wiring. However, it is unlikely that the TCU is at fault, as the most likely cause of the fault is in the wiring to the engine management ECU.

The "pull–up" resistors for the torque control and select lines are located in the engine management ECU. If the supply to this ECU is faulty, there will be no pull–up and the voltage on the select and control lines will drop. The TCU will diagnose this as an open circuit failure. Therefore, when fault codes 17 and 08 are seen together, the supply to the engine management ECU should be checked.

It is also possible that this fault may be caused by any non– approved security/alarm systems, which immobilise the engine management system by cutting its power supply.

Jaguar Cars Limited 2005

ALL MODELS **ITEM: 04**

26 DELETION OF BARRS LEAK

When draining and refilling the cooling system during vehicle maintenance, it is no longer necessary to add 'Barrs Leak' radiator leak sealer.

Process improvements and improved component quality now render the continued use of 'Barrs Leak' unnecessary.

Note: On vehicles prior to the following VIN's 'Barrs Leak' radiator leak sealer should still be used.

XJ6 Models – VIN. 670522
XJS Models – VIN. 186210

XJ6 92 MY **ITEM: 05**

51 FINAL DRIVE UNIT

VIN range 665838 to 667716

A number of vehicles within the above VIN range have been fitted with an alternative final drive unit. The current and alternative units can be distinguished by the number of bolts in the output shaft seal housing, five in the current final drive unit and three in the alternative. The alternative final drive will not be supported with spare parts until mid–1993, therefore, should there be any service concerns, Jaguar Parts Operations will only supply the current final drive units. To complete the repair it will be necessary to fit the appropriate speed sensor bracket.

For final drive unit part numbers EBC 10910/1/2/3 and EBC 10911/1/2/3, fit speed sensor bracket EBC 9820 (identified by a blue paint spot). For all other final drive unit part numbers, fit speed sensor bracket CAC 9884.

JLM. 11242 – NON PLOK
JLM. 11241 – P. LOK.

XJ6 1991 MY – 1993 MY **ITEM: 06**

86 BATTERY QUIESCENT DRAIN INFORMATION

To enable Jaguar Dealers and their technicians to keep abreast of both past and present quiescent drain specifications, the following information covers the vehicle range over the last three years.

METHOD OF MEASUREMENT

In order to correctly measure quiescent current, technicians MUST adhere to the following procedure:

- Disconnect the battery negative lead.
- Connect ammeter between the battery negative post and negative lead.
- Select high meter range (ie: equal to or more than 10 amps)
- Switch the ignition "on" then "off", then remove the key. (Do not crank the engine)
- Observe and record the measurements obtained over the time scales identified in this Bulletin.

Jaguar Cars Limited 2005

Note: Whilst testing is being carried out, no vehicle systems must be activated. For this reason, on 1993 Model Year vehicles, the boot light should be disabled and its lock latched shut.

QUIESCENT DRAIN FIGURES (Approximate values in milliamps)

COMPONENT	VEHICLE MODEL YEARS		
	93MY	92MY	91MY
	XJ6	XJ6	XJ6
Air con/heater	0.5		
Ride level	1.0	0.6	0.6
Transmission control	1.3	2.0	2.0
Central processor	3.3	8.0	8.0
Instrument pack	2.5	2.5	2.5
Alternator	0.5	3.0	3.0
Radio head unit	2.6	2.6	2.6
CD Autochanger	2.5	3.5	3.5
Clock	0.3	0.7	0.7
Air bag module	0.3		
Engine ECU	3.5	3.7	3.7
Infra–red locking	1.0	1.5	1.5
Seat memory modules	7.0		
Gearshift interlock control module	1.0		
Passive ECU		1.0	1.0
Door lock ECU	1.0	1.5	1.5
Facia switch panel		1.0	1.0
Wipe logic		1.0	1.0
F/R/H Bulb fail unit	0.6	0.6	0.6
F/R/H Bulb fail unit (UK)	1.5	1.5	1.5
F/L/H Bulb fail unit	0.6	0.6	0.6
F/L/H Bulb fail unit (UK)	1.5	1.5	1.5
R/R/H Bulb fail unit	0.4	0.4	0.4
R/L/H Bulb fail unit	0.4	0.4	0.4

TYPICAL QUIESCENT CURRENT LOADS FOR 1993 MY

	XJ6 3.2	XJ6 4.0	SOV 3.2	SOV 4.0	DAIM 4.0
SPECIFICATION TOTAL (NOMINAL VALUE)	20.0	28.6	27.3	28.6	28.6
BASE RF ALARM (DISARMED)	10	10	10	10	10
TOTAL DRAIN CURRENT	30.0	38.6	37.3	38.6	38.6
VEHICLE STANDING TIME IN DAYS (INC ALARM)	53.3	42.4	43.8	42.4	42.4

Jaguar Cars Limited 2005

Note: – These figures were calculated for a new battery, discharging from 80% charged to 20% charged.
- The base quiescent drain figures will vary between markets.
- Accessory parts will reduce the vehicle stand time.
- Non–approved accessories are likely to reduce considerably the vehicle stand time.

IMPORTANT: – Vehicle drain figures should be calculated according to their individual specifications.

This information must be passed on to the appropriate workshop technicians.

STAGES OF QUIESCENT DRAIN

IMPORTANT: – The current figures used here are only examples. The time scales shown are, however, accurate.

VEHICLE QUIESCENT DRAIN FIGURES

0–5 minutes	500 milliamps (example)
6–21 minutes	75 milliamps (example)
22 minutes onward	25 milliamps (example)

The above example highlights the significant drop in current demand, which can be measured after the vehicle has been left for a few minutes.

Note: – The current drain will not drop to this final value if the keys are left in the ignition, even if the ignition is not switched on.

ALARM QUIESCENT DRAIN FIGURES (R F Alarm with ultra–sonic intrusion sensors).

1–3 days	16 milliamps
4–28 days	10 milliamps
29 days onward	6 milliamps

Note: The current drain will only drop to this final value if the alarm is armed. If the alarm is left disarmed, then there will be a constant drain of 10 milliamps for as long as the vehicle is left.

For general current measurement and battery charging procedures, please refer to the Battery Care Manual.

Jaguar Cars Limited 2005

Service Bulletin

JAGUAR Daimler

ISSUE NO: JD 42/93

DECEMBER 1993

SRO: 44-15-32

MODEL : XJ6 4.0 LITRE AND XJS 4.0 LITRE

VIN RANGE: XJ6 629286 TO 667829
XJS 179737 TO 185820

SUBJECT : AUTOMATIC GEARSHIFT QUALITY

CUSTOMER CONCERN : Harsh upshift under light throttle at 50 MPH (80 KPH)

ADVICE TO CUSTOMER : A modified transmission control unit (TCU) is now available which gives a significant improvement in gearshift quality when the gearbox mode switch is in the NORMAL position. In SPORT mode, there is a marginal improvement in shift quality.

DEALER ACTION : Yes

REPAIR METHOD :

1. **PRELIMINARY CHECKS**

Dealers should ensure that the customer complaint is not caused by any of the following:

a. Engine tune
b. Gearbox oil level
c. Selector cable adjustment
d. Rotary switch setting

Use JDS to interrogate the TCU for fault codes.

2. **VERIFICATION**

Dealers must verify that the correct parts are fitted:

Transmission - Part No. EBC 4409

Transmission
Control Unit - Part No. DBC 10110

Jaguar Cars Limited 2005

3. **RESOLUTION**

Where the customer complaint persists after the above checks, replace the existing TCU by the modified unit.

PARTS INFORMATION : The modified TCU is available through Jaguar Parts Operations:

Part No. LMA 2400AA. Transmission Control Unit.

ADMINISTRATION INFORMATION : Control will be exercised concerning the return of TCUs. All displaced units must be accompanied by an ECU Information Label (JJM 10 59 99) as detailed in UK Policy Letter JHSC 239 or Export Policy Letter JOSC 137. Both Policy Letters were dated March 1993.

It is **essential** that Dealers replacing TCUs supply the following additional information on the above label, attached to the displaced TCU:

* VIN and gearbox serial number (instead of JDS identified codes).
* Reference to: 'Bulletin JD 42/93'
* For UK market: the Warranty Return Ref No.

  For Export markets: the Claim Number and Dealer Code.

FAILURE TO SUPPLY ALL OF THE ABOVE INFORMATION (CLEARLY & LEGIBLY) WILL RESULT IN CLAIMS BEING REJECTED.

WARRANTY CODES:

XJ6 and XJS - 4CGE

REPAIR OPERATION CODES:

SRO: 44-15-32 Transmission Control Unit-renew 0.75 hours.

Jaguar Cars Limited 2005

Service Bulletin

JAGUAR

Daimler

DATE: FEBRUARY 1994

REF: JD 07/94

00 ERRATUM

PLEASE NOTE THE FOLLOWING ERRATUM IN SERVICE BULLETIN JD 43/93

JD 43/93 dated December 1993, Page 2, line 16:

This line SHOULD read:

(Part Nos. C 2243A to C 2243X).

Please amend the original Service Bulletin accordingly.

XJ6 & XJ12 FROM VIN 593884 **ITEM 04**

03 REPAIR OPERATION TIMES - ADDITIONAL

The following Service Repair Operation is now available for replacing the vehicle set of wishbone bushes and is applicable to vehicles from VIN 593884:

60-35-29 Upper & Lower Wishbones - Vehicle Set - Strip & Rebuild

4.85 Hours

Please amend your Repair Time Schedule accordingly.

No other Repair Times are affected.

ALL JAGUAR AND DAIMLER MODELS WITH V12 ENGINE **ITEM: 05**

12 TIMING CHAIN TENSIONER ACCESS GROMMET

Whenever the access grommet to the timing chain tensioner of a V12 engine is refitted, both the grommet and its location in the timing cover should be cleaned, to remove all traces of oil.

A bead of RTV sealant should be applied between the ridges of the grommet, which will prevent any possibility of an oil weep from the grommet area.

Jaguar Cars Limited 2005

ALL WITH AJ6 ENGINE **ITEM: 06**

12 AJ6 ENGINE SUMP DRAIN PLUG - REVISED TORQUE SETTING

The torque setting for the sump drain plug on ALL AJ6 engines has been reduced from 65 - 79 Nm to:

Revised torque setting: 48 - 63 Nm.

This revised setting should be used whenever a sump drain plug is refitted.

Ensure that the latest pattern of washer, incorporating a rubber sealing ring, is used when refitting a drain plug. (Part No. EBC 9044 available via Jaguar Parts Operations).

In production, engines assembled with the revised torque setting are fitted from approximately VIN 684700 (XJ6) and VIN 189150 (XJS).

ALL WITH AJ6 ENGINES **ITEM: 07**
PRIOR TO VIN 677386 (XJ6)
PRIOR TO VIN 187754 (XJS)

12 CYLINDER HEAD EROSION

THIS SERVICE BULLETIN SUPERSEDES THE ENTIRE CONTENTS OF SERVICE BULLETIN JD 08/92 ITEM 31

Where the cylinder head of an AJ6 engine has been removed in the course of a Service Repair Operation, it may be noticed that a certain amount of erosion to the cylinder head face has occurred around the coolant passages of the cylinder head, forming irregular cavities.

Provided that the eroded area (condition C, Fig.1.) does NOT extend into the area occupied by any firing ring, (Item 'A', Fig 1.), of the head gasket, using a head gasket as a template; a repair can be effected and there is no need to replace the cylinder head.

Where erosion has resulted in the formation of cavities in less critical areas around the coolant passages, (condition D, Fig. 1.), repair of the cylinder head should be undertaken. Careful filling of the cavities to restore the cylinder head face to its original surface profile may be undertaken by means of a proprietary 'Plastic Metal' (eg 'BELZONA'). A suitable product will be available shortly from Jaguar Parts Operations under Part No. JLM 11719.

IMPORTANT: CYLINDER HEADS SHOULD NOT BE REMOVED TO LOOK FOR THIS CONDITION. THE ABOVE ACTION SHOULD ONLY BE NECESSARY WHEN THE CONDITION IS NOTICED ON REMOVAL OF A CYLINDER HEAD FOR OTHER REPAIR WORK.

Jaguar Cars Limited 2005

TECHNICAL BACKGROUND

On engines prior to VIN 677386 (XJ6) and VIN 187554 (XJS) the foundry practices involved in the manufacture of the cylinder head and the cylinder block resulted in elongated cored coolant passages at the upper face of the cylinder block, facing small diameter drilled passages in the cylinder head, separated by the gasket. Coolant flow between cylinder block and cylinder head is controlled by the diameter of the holes in the cylinder head gasket (Item B, Fig. 1.)

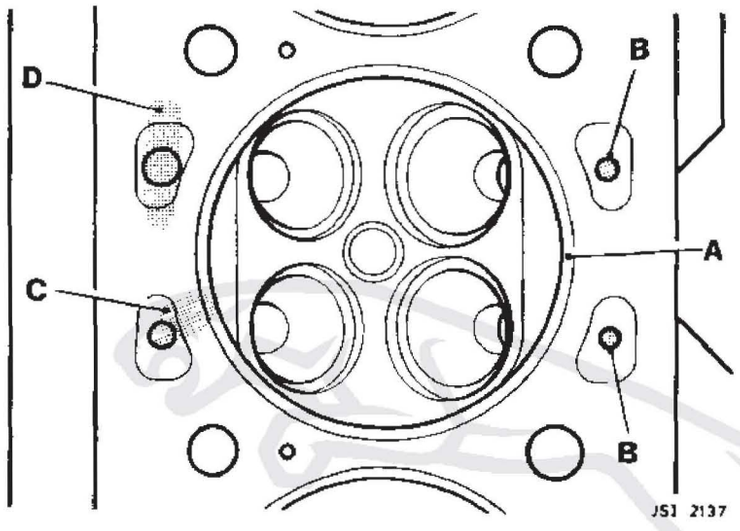

Fig. 1.

In service, the material of the head gasket 'collapses' into the larger cored passage of the cylinder block, leaving a gap between the cylinder head and the gasket, surrounding one or more coolant passages. Coolant in this gap may, in certain circumstances, boil locally and cause erosion of the cylinder head material.

From the above VINs, the coolant apertures in the cylinder head have been enlarged to correspond with the apertures in the cylinder block; hence coolant can no longer be trapped between the cylinder head gasket and cylinder head face.

REPAIR METHOD

On a cylinder head on which erosion, within the above permissible limits, has occurred, the cavities should be filled with a suitable 'Plastic Metal'. It is desirable that such infilling should restore the eroded area to be flush with the machined face, such that any re-machining of the face is unnecessary. However, should it become impossible to maintain the required surface finish and dimensions without machining, reference should be made to Service Bulletin JD 02/93 (Issued January 1993) for full details of sizes, limits, surface finish etc.

Jaguar Cars Limited 2005

IMPORTANT: EXCESSIVE REMOVAL OF MATERIAL FROM THE CYLINDER HEAD FACE MAY LEAD TO PINKING/DETONATION PROBLEMS.

Note: On rebuilding the engine, ensure that the cooling system contains the correct mixture of Jaguar Anti-Freeze/Coolant/Corrosion Inhibitor (See relevant Service Manual, Section 26, 'Description and Anti-Freeze').

XJ6 & XJS 4.0 LITRE 1994 MODEL YEAR **ITEM: 08**
XJ6 3.2 LITRE 1994 MODEL YEAR

44 TRANSMISSION FIXING BOLTS

On a number of the above models, manufactured during November and December 1993, four of the ten bolts which fix the automatic transmission convertor housing to the intermediate plate have been found to be of incorrect material specification. The bolts concerned are indicated by arrows in the illustration below.

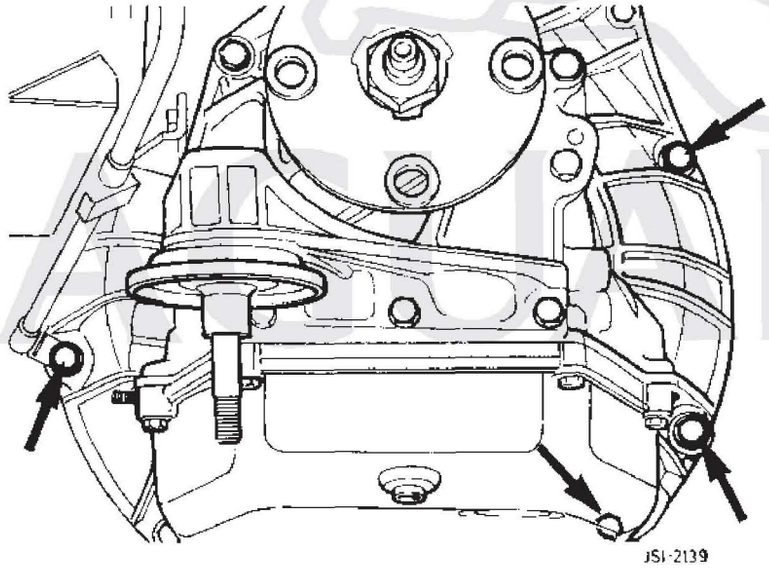

The suspect bolts are black in colour; if refitted in the course of a service repair operation involving the separation of the transmission from the engine, they would be likely to suffer thread stripping when tightened to the upper limit of recommended torque.

Should the occasion arise to separate the transmission from the engine in the course of a service repair operation, the affected bolts should be replaced by bolts of correct specification. Tests have indicated that there is little likelihood of the affected bolts failing in service.

Jaguar Cars Limited 2005

IMPORTANT: TRANSMISSION UNITS SHOULD NOT BE REMOVED TO LOOK FOR ANY CONCERN. REPLACEMENT OF THE BOLTS CONCERNED IS ONLY REQUIRED AS A PRECAUTION IN THE EVENT OF MAJOR SERVICE REPAIRS.

Vehicles affected may only be recognised by Engine Number, within the ranges:

XJ6 & XJS 4.0 Litre:	Engine No. 9E 185496	to	9E 186799
XJ6 3.2 Litre:	Engine No. 9B 116832	to	9B 117005

Replacement bolts should be ordered via Jaguar Parts Operations:

Washer-faced bolt. Part No. FB 110125 J. Qty/Vehicle 4.

ANY DISPLACED PARTS SHOULD BE RETURNED TO JAGUAR WARRANTY RETURNS AT BAGINTON, THROUGH THE NORMAL CHANNELS. FAILURE TO DO SO MAY RESULT IN THE CLAIM FOR THE ABOVE PARTS BEING DEBITED.

Torque Setting:

Bolt, Convertor Housing to Intermediate Plate: 49 - 54 Nm.

JAGUAR & DAIMLER XJ6 AND XJ12 1994 MY ALL VARIANTS FROM VIN 687219 **ITEM: 09**

76 FRONT FOOTWELL CARPETS - FITTING PROCEDURE

Additional to the information in Service Bulletin JD 38/93 Item 40, a further improvement to the method of retention of front footwell carpets on 1994 MY Saloon models has been introduced.

Both versions are described and illustrated in this Service Bulletin.

Note: In both cases, correct fitment of the carpet within the footwell is essential to eliminate the possibility of subsequent displacement of the carpet.

FROM VIN 687219 TO VIN 697999

Introduced as a first improvement for 1994 Model Year vehicles, the rear edge of both the Driver's and Passenger's footwell carpet (Item 'B', Fig.1.) has a 'J' section plastic strip (Item 'A', Fig.1.), which engages with a corresponding section (Item 'C', Fig.1.) fixed to a bracket on the front of the Seat ECU cover.

CARPET FITMENT PROCEDURE - DRIVER'S SIDE

In a new vehicle, ex-factory, the Driver's side carpet is fitted in the front footwell, and is enclosed within a plastic covering which provides protection during vehicle delivery and PDI. During final preparation of a new vehicle for the customer, the following action should be taken to ensure correct fitting:

Jaguar Cars Limited 2005

1. Remove the Driver's side carpet from the footwell.

2. Remove the plastic protective covering.

3. Fold the carpet in half, and centralise it in the footwell.

4. Lift the rear edge of the carpet; align and fully engage the plastic 'J' section strip on the carpet to the metal bracket on the front of the seat ECU cover. (See Fig. 1.)

5. Align the carpet to the footwell; smooth the carpet flat into the footwell, particularly at the rear and sides of the carpet.

6. Fit the forward edge of the carpet under the control pedals, ensuring that the cut-out in the carpet is correctly aligned over the kick-down switch to provide the required clearance.

Where the carpet is being refitted to a vehicle in service, or should it be necessary to fit a replacement carpet, items 3-6 above should be observed to ensure correct fitment.

CARPET FITTING PROCEDURE - PASSENGER'S SIDE

The carpet on the Passenger's side of the vehicle is similarly retained at the rear edge. Ensure that on a vehicle being prepared for the customer that the carpet has remained correctly fitted during the delivery cycle. Items 3-5 above should also be observed when refitting a carpet, or when fitting a replacement carpet.

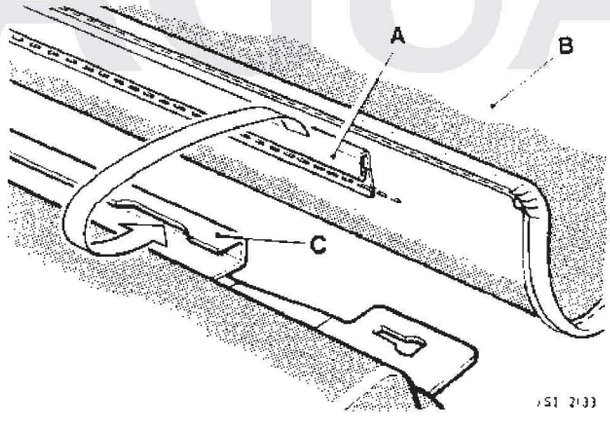

Fig. 1.

Jaguar Cars Limited 2005

FURTHER IMPROVEMENT TO 1994 MY VEHICLES

FROM VIN 698000

From the above VIN, the rear edges of both Driver's and Passenger's side carpets are similarly retained by flat plastic strips (Item 'A', Fig.2) engaging in brackets on the front of the seat ECU covers, (Item 'C', Fig.2.). In addition, a strip of 'VELCRO' fastening (Item 'D', Fig.2.) is fitted to the outer ends of both carpets, with a corresponding strip fitted to both ECU covers (Item 'E',Fig.2.), thus providing additional security to the footwell carpet location.

CARPET FITTING PROCEDURE

During final preparation of a new vehicle, or when refitting a carpet or fitting a replacement carpet, the procedure outlined previously should be observed.

In addition, however, ensure that the 'VELCRO' strips (Item 'E', Fig.2.) at the outer edges of both front carpets are fully engaged to the corresponding strips on the ECU covers, after having correctly located the plastic retaining strips to the brackets and aligned each carpet within its footwell.

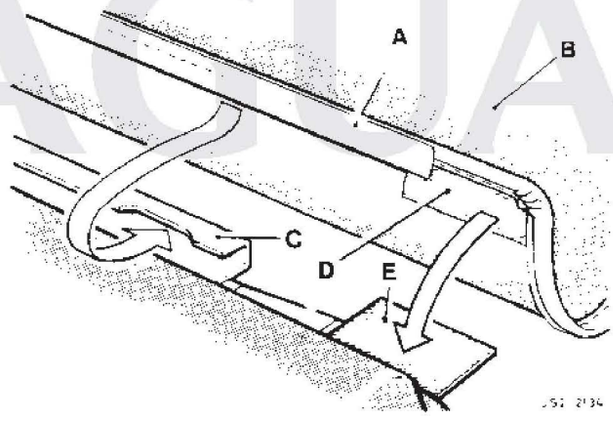

Fig. 2.

Jaguar Cars Limited 2005

Service Bulletin

JAGUAR Daimler

ISSUE NO: JD 08/94

FEBRUARY 1994

SRO: 44-91-10

MODEL : ALL JAGUAR XJ6 4.0 LITRE
ALL JAGUAR XJS 4.0 LITRE

SUBJECT : ENGINE STALLING - AUTOMATIC TRANSMISSION

CUSTOMER CONCERN : Engine stalls when selecting Reverse or Drive from Park; most noticeable when the engine is cold.

ADVICE TO CUSTOMER : The concern may be overcome by a simple rectification within the automatic transmission.

BACKGROUND

The concern arises from partial engagement of the torque convertor lock-up clutch, owing to the sticking of a valve or to a restricted oilseal within the automatic transmission; this may be easily be rectified.

DEALER ACTION : Yes, where necessary.

REPAIR METHOD : The following initial diagnosis must be undertaken to check that the concern arises from the control valves for the lock-up clutch:

1. Check engine set-up condition, using JDS.
2. Check transmission fluid level.
3. Interrogate the Transmission Control Unit for Fault Codes, using JDS.

Where the above checks prove satisfactory, proceed as follows:

Referring to the appropriate Service Manual, Section 44.2, remove the Valve Block Assembly as described for SRO 44-40-01.

Jaguar Cars Limited 2005

1. Where the vehicle has covered less than 1000 miles (1600 Km), approximately, from new:

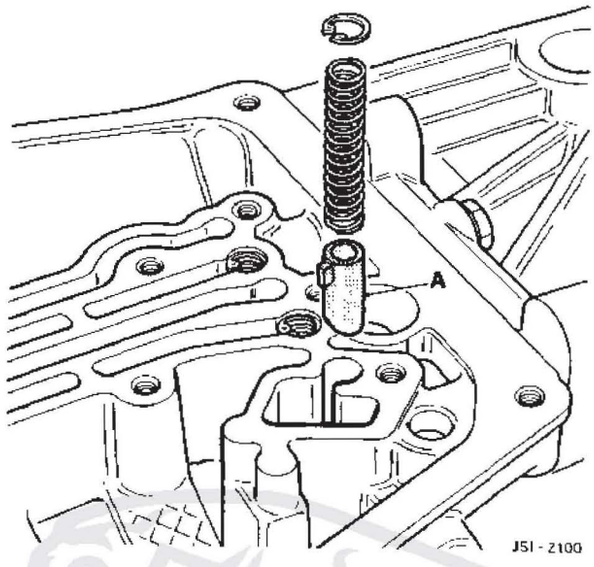

Fig. 1.

Remove the oil seal (Part No. JLM 863), Item A, Fig. 1.

Should this seal be incorrectly fitted or restricted, it may interfere with the transmission fluid pressure so as to cause a partial engagement of the torque convertor lock-up clutch; in turn, this may cause the engine to stall at low/idling RPM.

Fit a new seal.

2. Where the vehicle has covered more than 1000 miles (1600 Km) from new:

Remove the screws and retaining plate, allowing removal of the torque convertor control valve, Item A, Fig. 2.

Clean the valve and its bore; check that the valve moves freely and smoothly in the bore.

Should there be any tendency of the valve to stick, gently lap the valve until a smooth-running fit is achieved.

This valve controls the flow of fluid to the torque convertor lock-up clutch. Should the valve stick, the resultant incorrect fluid flow may lead to the engine stalling at low RPM.

Jaguar Cars Limited 2005

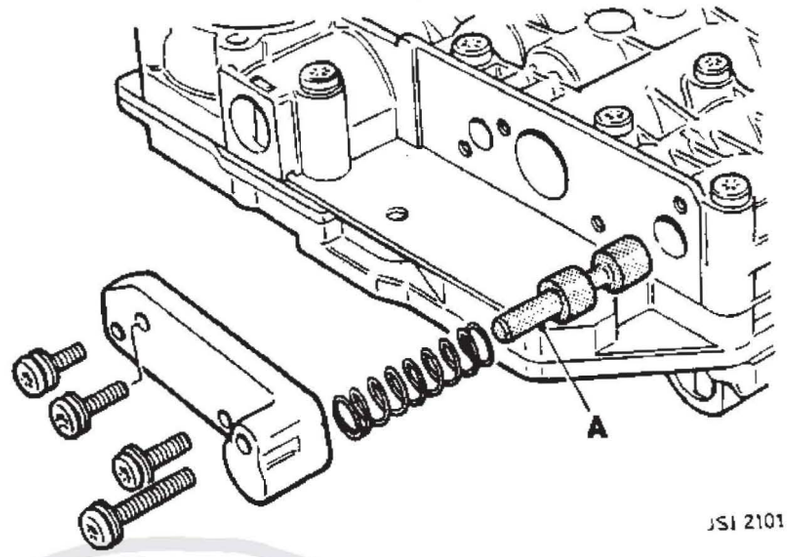

Fig. 2.

Thoroughly clean all parts; re-assemble using a new spring and oil filter.

Note: When refitting the valve body, the 13 securing screws should be tightened to a torque setting of 8 Nm.

SERVICE TOOLS : JD 126 Control Unit oil seal remover/replacer.

PARTS INFORMATION :

Oil Filter (XJS)	JLM 664
Oil Filter (XJ6)	JLM 2128
Oil Seal	JLM 863
Spring, torque convertor control valve	JLM 11573

ADMINISTRATION INFORMATION : WARRANTY CODE

4 C G Y - Automatic Transmission, lock-up clutch, stalling.

REPAIR OPERATION CODE AND LABOUR TIME ALLOWANCE

SRO: 44-91-10 1.75 hours.

Jaguar Cars Limited 2005

Service Bulletin

JAGUAR Daimler

DATE: MARCH 1994

REF: JD 20/94

XJS ALL 4.0 & 6.0 LITRE **ITEM: 20**

44 AUTOMATIC TRANSMISSION - GEAR SELECTOR CABLE ADJUSTMENT

From VIN 192487 the setting procedure in manufacture has been revised.

The Service Manual setting procedure will remain unchanged.

XJ6 & XJ12 1994 MY FROM VIN 703024 **ITEM: 21**

76 SLIDING ROOF - DELETION OF MANUAL OPERATION HANDLE

From the above VIN, a manual operation key is no longer supplied with each vehicle, clipped to the rear of the roof console panel.

It is therefore recommended that all Dealers should keep handy a spare handle, for emergency use in their workshop, together with a small stock in their Parts Department for those customers who may wish to purchase a handle as an accessory.

In the event of a malfunction of the powered operation where no key is carried on the vehicle, with a sunroof sliding panel partly or fully open, the sliding panel may be closed as follows, using a wide-blade screwdriver and a pair of long-nose pliers:

> Release the turn screw of the roof console panel through a quarter turn, slide the console panel rearwards to disengage the clips from the location tags.
>
> Insert the blade of the screwdriver into the slot of the drive mechanism; rotate the slot in the desired direction of travel (as indicated by arrows on the surround plate) through approximately 1/4 revolution, until resistance is felt.
>
> With long nose pliers, on the rim of the cam plate surrounding the motor drive, pull down on the cam plate until it is released and springs downwards through a short distance, while slightly oscillating the screwdriver to assist release. This action disengages the cam ring and mechanism from the motor drive.

Jaguar Cars Limited 2005

Continue to hold the cam plate down against light spring pressure with the pliers, while simultaneously rotating the drive mechanism by means of the screwdriver. (As the drive and surrounding cam plate are engaged to each other by detents, (but tending to separate under spring action) it is necessary to maintain the downward force on the cam plate by the pliers, which must therefore be rotated as the screwdriver is rotated).

With the sliding panel fully closed, remove the pliers. Rotate the drive mechanism by means of the screwdriver, in the opposite direction to that used above; after approximately 1/4 turn, with the slot aligned to the two detents in the cam plate, the cam ring will return to its original location. This action re-engages the mechanism to the motor drive.

It may be found impracticable, in the method described above, to exert the force necessary to complete the normal actions of the sliding roof mechanism, which, after closure of the sliding panel, raise and lock the panel against the surrounding fixed roof. The above method should, however, enable the sliding roof to be closed to a position which will provide a weatherproof and secure condition for the vehicle, until the malfunction can be traced and rectified.

For the same reasons, it may be found impossible to open a sliding roof panel, from the fully closed position, by the method outlined above.

Spare handles, for manual operation of the sliding roof panel, are available via Jaguar Parts Operations, under Part No. BBC 8355.

Jaguar Cars Limited 2005

Service Bulletin

JAGUAR

Daimler

DATE: MAY 1994

REF: JD 27/94

XJ6 & XJ12 1993 MY VIN 667579 ONWARDS **ITEM: 23**

LEFT HAND DRIVE MODELS ONLY

03 REPAIR OPERATION TIMES - AMENDMENTS

The following Repair Operation Times are amended. They are applicable to Left Hand Drive models only, on which it is necessary to lower the steering column from its mountings to permit removal of the heater matrix. Please amend your Repair Operation Time Schedule accordingly.

80-20-29	Heater matrix - renew	Euro LHD	1.90 hours
		USA LHD	1.95 hours
82-25-10	Heater matrix - renew	Euro LHD	1.90 hours
		USA LHD	1.95 hours

ALL JAGUAR AND DAIMLER MODELS WITH V12 ENGINES **ITEM: 25**

12 SEALING OF BOLT THREADS - OIL SUMP SANDWICH PLATE

In the event of oil leakage around the base of the crankcase and the oil sump, the following action should be taken before consideration of any gasket replacement:

1. Check the torque of the securing bolts, oil sump to sandwich plate, and the exposed bolts, sandwich plate to crankcase

   Torque Setting: 21 - 27 Nm.

2. Clean the area in which oil leakage has occurred.

3. Road test the vehicle; examine for oil leaks.

ONLY where a fresh oil leak is apparent after the above action should either the sandwich plate to crankcase gasket and/or the oil sump to sandwich plate gasket(s) be replaced.

continued../

Jaguar Cars Limited 2005

In addition to the possibility of oil leakage at either of the above gaskets, oil may also spread upwards along the threads of certain bolts which retain the sandwich plate and baffle tray. The heads of the bolts are in contact with oil, while the tops of the threads in the crankcase are exposed externally. In the event of the oil sump being removed to allow replacement of either gasket, the threads of the bolts concerned should be sealed by the application of 'Loctite 542' sealer.

It is NOT necessary to remove the sandwich plate to undertake the following rectification.

The bolts concerned are identified by shading in Fig. 1 below and in Fig. 2 opposite.

Remove the bolts identified by shading; thoroughly clean and degrease them, using a suitable solvent; wipe or blow them dry.

Note: (9 bolts on XJS V12 engines; 7 bolts on XJ12 engines).

Using a suitable solvent and a 'bottle'-type brush, thoroughly clean out any residual engine oil from the threads in the crankcase; blow out the threads using an airline.

IMPORTANT: BOTH THE THREADS OF THE BOLTS AND THE THREADS INTO WHICH THE BOLTS ARE FITTED MUST BE THOROUGHLY DEGREASED, OTHERWISE THE 'LOCTITE' 542 WILL NOT CURE TO CREATE AN EFFECTIVE SEAL.

Using a clean cloth and/or a 'bottle'-type brush, apply 'Loctite Primer' to the threads in the crankcase. Allow to dry.

When refitting the sandwich plate retaining bolts concerned, apply 'Loctite 542' to the bolt threads.

Torque setting: 21-27 Nm.

Note: Both illustrations show <u>part</u> of the sandwich plate, **<u>as viewed from below</u>**, with the oil sump having been removed.

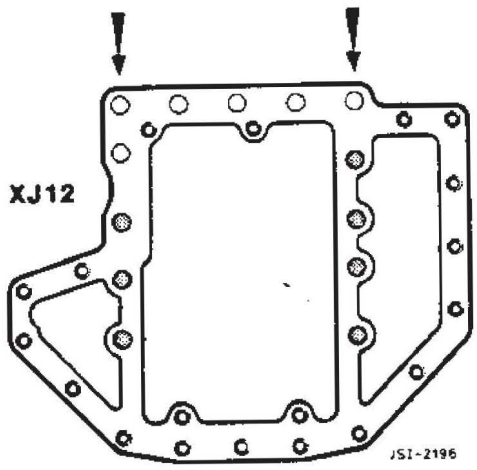

Fig. 1. XJ12 MODELS

Jaguar Cars Limited 2005

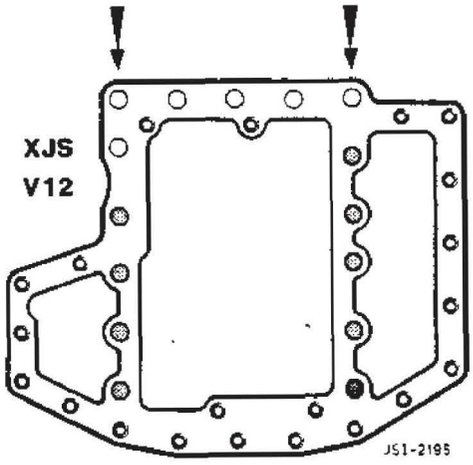

Fig. 2. XJS V12 MODELS

If undertaking repairs on engines earlier than those listed below, refer to Service Bulletin JD 08/92, Item 29, for details of gasket and fastener changes, introduced at those engine numbers, which should be retrofitted to earlier engines.

7P 67281	S.III
8S 86317	XJS V12
8W 10641	XJR-S 6.0L

ALL XJ12 6.0 Litre engines (from 1993.25 MY) and XJS 6.0 Litre engines (from 1993.5 MY) are to the latest condition, and do not require any changes of fasteners.

PARTS INFORMATION

'Loctite 542' sealer should be ordered via Jaguar Parts Operations, under Part Number JLM 1746.

Gasket(s) should be identified from the current Parts microfiche for the vehicle concerned.

XJS 4.0 LITRE VIN RANGE 193616 TO 193853 **ITEM: 26**

44 DIPSTICK - AUTOMATIC GEARBOX

A small number of vehicles within the above VIN range may have been fitted with a dipstick of incorrect specification.

The total number of vehicles affected is 7.

continued../

Jaguar Cars Limited 2005

In the course of PDI checks of automatic gearbox fluid level, Dealers are requested to inspect and check the dipstick:

The dipstick may be identified by measurement between the the tip and the 'Min Hot' marking, as illustrated below:

CORRECT DIPSTICK: Measurement = 32 mm.

INCORRECT DIPSTICK: Measurement = 56 mm.

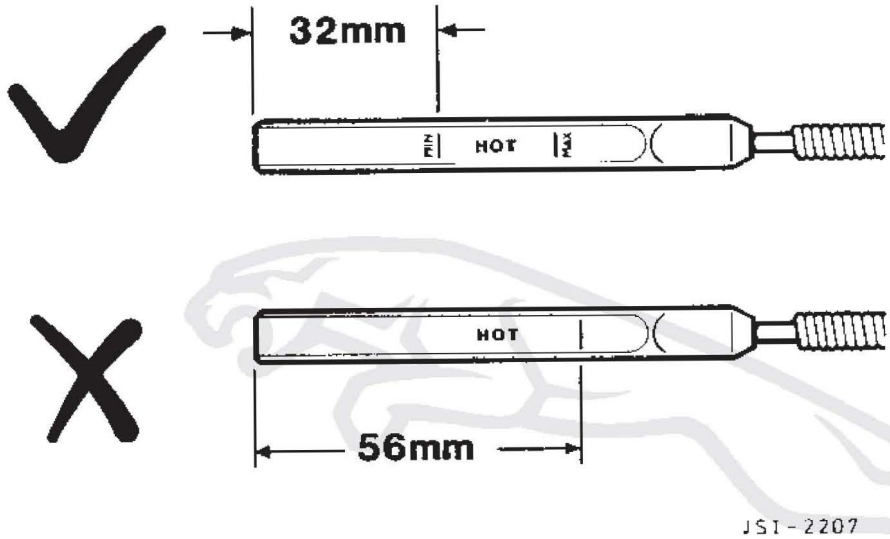

Where an incorrect dipstick is identified, it should be replaced by one of the correct specification, Part No. EBC 8409, the incorrect item being returned through normal Warranty channels.

Where vehicles within the affected VIN range have already been sold, Dealers should take the first opportunity to inspect the automatic gearbox dipstick, as above.

Warranty Fault Code: 4 B H Z

Jaguar Cars Limited 2005